深圳市宇锡科技有限公司

SHENZHEN YOUSEE TECHNOLOG CO., LTD

DISPLAY SPECIFICATION

Product NO: (产品型号) **YX50148A**

Customer : (客 户) _____

APPROVED BY CUSTOMER 客户签署栏	
Approved by 审核	Remark 备注

APPROVED BY YOUSEE 宇锡签署栏			
Prepared by 制作	Checked by 检查		Approved by 审核
	电 子	结 构	

深圳市宇锡科技有限公司

Shenzhen Yousee Technology Co.,Ltd

邹长城 LONG

Tel:15818552076

E-mail: zouchangcheng@youseelcd.com

Adress:深圳市西乡簕竹角鸿竹雍启 C 栋 5 楼 3 楼，D 栋 2 楼

2F bldg D and 5F, bldg C, Hongzhu Yongqi, Lezhujiao, Xixiang, Shenzhen

REVISION RECORD
修改记录

REV NO. 版本	CONTENTS 内容	REV DATE 修改日期	REMARKS 注释
A	**First Edition**	**2024/11/15**	First Edition

CONTENTS
目录

1.GENERAL INFORMATION -4
基本描述
2 .MODULE OUTLINE DRAWIN -5
产品外形图
3.INTERFACE DESCRIPTION -6
接口定义
4.ABSOLUTE MAXIMUM RATINGS -7
极限参数 (IC)
5.ELECTRICAL CHARACTERISTICS -7
模块电气特性
6.BACKLIGHT CHARACTERISTICS -8
背光电气特性
7.OPTICAL CHARACTERISTICS -8-11
光学特性
8.Recommended Operating Sequence -11-12
推荐上/下电工作流程
9.RESET INPUT TIMING -13
复位时序
10.PRODUCTION PROCESS CONTROL -14
生产过程控制管理
11.INSPECTION SPECIFICATIONS -15-16
品质检验标准
12.RELIABILITY TEST CONDITIONS -17
可靠性测试条件
13.PRECAUTIONS FOR USING LCD MODULES -19-20
模组使用注意事项
14.PACKING SPCIFICATION -21
包装规格
15.SPECIAL REMAKS -22
注意事项

1. GENERAL INFORMATION
基本描述

Item 项目	Contents 内容	Unit 单位
LCD Type LCD 类型	5.0 IPS TFT-LCD	-
Number of Dots 点阵	800(RGB) * 480	Dot
Outline dimensions 外形尺寸	120.7(W)* 75.8(H)*2.9(T)	mm^3
Active area 有效区域	108(W)* 64.8 (H)	mm^2
Pixel pitch 像素	0.135*0.135	mm^2
Module size 模组尺寸	5.0	inch
Viewing direction 视角方向	ALL	O'clock
Backlight type 背光类型	White LED(12*LED)	-
LCD Driver IC LCD 驱动 IC	ST7265A	-
Interface type 接口类型	24BIT RGB interface	-

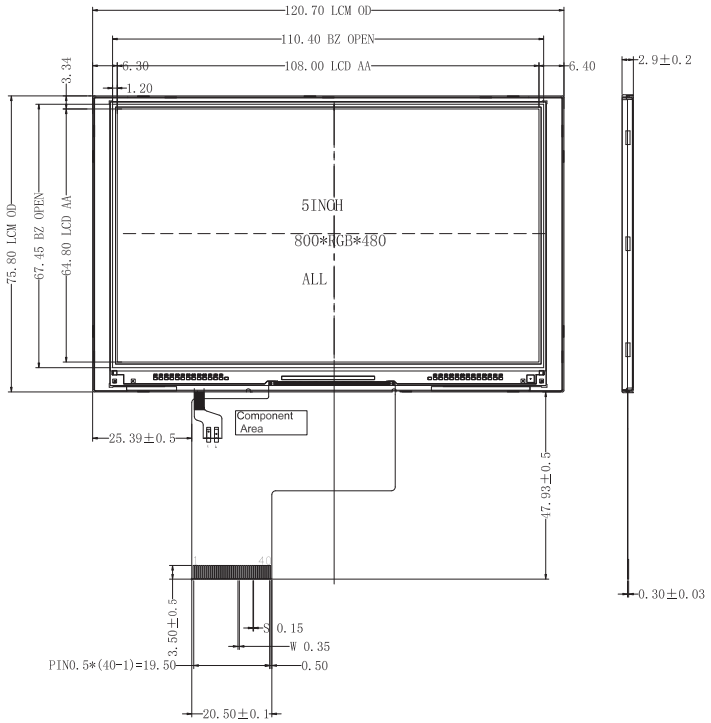

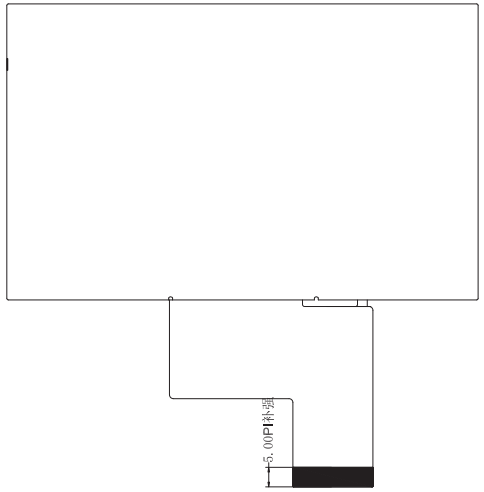

PIN DESCRIPTION

NO.	PIN NAME	NO.	PIN NAME	NO.	PIN NAME	NO.	PIN NAME
1	LED-K	11	R06	21	B00(LSB)	31	DISP
2	LED-A	12	R07(MSB)	22	B01	32	HSYNC
3	VSS	13	G00(LSB)	23	B02	33	VSYNC
4	VDD	14	G01	24	B03	34	DE
5	R00(LSB)	15	G02	25	B04	35	NC
6	R01	16	G03	26	B05	36	VSS
7	R02	17	G04	27	B06	37	XR
8	R03	18	G05	28	B07(MSB)	38	YD
9	R04	19	G06	29	VSS	39	XL
10	R05	20	G07(MSB)	30	DCLK	40	YU

LCD Technical parameters:
1) LCD display mode: 5.0"TFT transmissive
2) Viewing angle: IPS (full viewing angle)
2) Display color: 16M
3) Dot matrix: 800 X 480
4) Driver chip model: ST7265-G6-E8
5) Operating temperature: -20°-70°
Storage temperature: -30°-80°
6) Unmarked tolerance: ±0.2mm
7) Materials and processes comply with ROHS

Interface:	24RGB interface	
01		
02		
版本	更改内容	更改时间

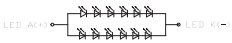

IF=2*20mA, VF=19.6V

(CIRCUIT DIAGRAM)

TITLE: ASSEMBLY	DO NOT SCALE THIS DRAWING, GENERAL TOLERANCE: ±0.2				
PART NO.:	YX50148A			MODULE NO.:	00
DRAWN BY:		DATE:		PROJECTION:	
CHECKED BY:		DATE:		SCALE: N.T.S	UNIT: mm
APPROVED BY:		DATE:		SHEET: 1 OF 1	

深圳市宇锡科技有限公司
SHENZHEN YOUSEE TECHNOLOG CO.LTD

3. INTERFACE DESCRIPTION 接口定义

NO.	PIN	I/O	Description
1	LED-K	I	LED Cathode
2	LED-A	I	LED Anode
3	VSS	I	Power Ground
4	VDD	I	Power Source
5	R00	I	RED Data Signal (LSB)
6	R01	I	RED Data Signal
7	R02	I	RED Data Signal
8	R03	I	RED Data Signal
9	R04	I	RED Data Signal
10	R05	I	RED Data Signal
11	R06	I	RED Data Signal
12	R07	I	RED Data Signal
13	G00	I	GREEN Data Signal(LSB)
14	G01	I	GREEN Data Signal
15	G02	I	GREEN Data Signal
16	G03	I	GREEN Data Signal
17	G04	I	GREEN Data Signal
18	G05	I	GREEN Data Signal
19	G06	I	GREEN Data Signal
20	G07	I	GREEN Data Signal
21	B00	I	BLUE Data Signal(LSB)
22	B01	I	BLUE Data Signal
23	B02	I	BLUE Data Signal
24	B03	I	BLUE Data Signal
25	B04	I	BLUE Data Signal
26	B05	I	BLUE Data Signal
27	B06	I	BLUE Data Signal
28	B07	I	BLUE Data Signal
29	VSS	I	Power Ground
30	DLCK	I	Clock Signal to Sample each date
31	DISP	I	Display ON/OFF Signal
32	HSYNC	I	Horizontal Synchronizing Signal
33	VSYNC	I	Vertical Synchronizing Signal
34	DE	I	Input Data enable control
35	NC	-	Set Open
36	GND	I	Power Ground
37	XR	I	Touch Panel PIN
38	YD	I	Touch Panel PIN
39	XL	I	Touch Panel PIN
40	YU	I	Touch Panel PIN

4. ABSOLUTE MAXIMUM RATINGS
极限参数(IC)

Parameter 参数	**Symbol** 符号	**Min** 最小值	**Max** 最大值	**Unit** 单位
Supply voltage for logic 逻辑电压 I/O	IOVCC	-0.3	+3.6	V
Input voltage for analog circuit 输入模拟电压	VCC	-0.3	+3.6	V
Operating temperature 操作温度	TOP	20	+70	˚C
Storage temperature 存储温度	TST	-30	+80	˚C
Humidity 湿度	RH	-	90%(60˚C)	RH

5. ELECTRICAL CHARACTERISTICS
模块电气特性

Parameter 参数	Symbol 符号	Min 最小指	Typ 典型值	Max 最大值	Unit 单位
Analog operating voltage 模拟电压	VCC	2.8	3.3	3.3	V
Logic operating voltage 逻辑电压	IOVCC	/	/	/	V
Input voltage “H”level 输入高电平	V_{IH}	0.7 *IOVCC	-	IOVCC	V
Input voltage “L”level 输入低电平	V_{IL}	GND	-	0.3* IOVCC	V
Output voltage “H”level 输出高电平	V_{OH}	0.8*IOVCC	-	IOVCC	V
Output voltage “L”level 输出低电平	V_{OL}	GND	-	0.2 *IOVCC	V

6. BACKLIGHT CHARACTERISTICS
背光电气特性

Item 项目	Symbol 符号	Min 最小值	Typ 中间值	Max 最大值	Unit 单位	Condition 条件
Forward voltage 正向电压	Vf	18.5	19.6	20	V（伏）	If=40mA, Ta=25℃
Number of LED LED 灯数	-	12			Piece （颗）	-
Connection mode 连接类型	S/P	2Series and 6Parallel （6 灯串联 2 并）			-	-

7. OPTICAL CHAYACTERISTICS
光学特性

Item 项目	Symbol 符号	Condition 条件	Min 最小值	Typ 典型值	Max 最大值	Unit 单位	Remark 注释	Note 备注
Response time 响应时间	Tr+Tf	Θ=0° Ø=0° Ta=25˚C	-	30	40	ms	FIG1	1
Contrast ratio 对比度	Cr		-	1000	-	-	FIG2	2
Color gamut 饱和度	S(%)			55	-	%	-	-
Luminance uniformity 均匀度	δWHITE		-	80	-	%	FIG2	3
Viewing angle range 视角范围	Θx+	CR≧10 Ta=25˚C	-	80	-	deg	FIG3	4
	Θx-		-	80	-	deg	FIG3	
	Θy+		-	80	-	deg	FIG3	
	Θy-		-	80	-	deg	FIG3	
LCM 亮度	Lv	Θ=0° Ø=0° Ta=25˚C	-	600	-	Cd/m2	FIG2	5
CIE (X,Y) Chromaticity 色度坐标	White(X)		-	TBD	-	-	FIG2	6
	White(Y)		-	TBD	-	-		

Note1.Response time is the time required for the display to transition from White to black(Rise Time,Tr)and from black to white(Decay Time,Tf).For additional information see FIG1...

备注 1.响应时间是 Tr(上升时间）与 Tf(下降时间）的和，Tr 指显示黑色画面转为显示白色画面需要时间，Tf 指显示白色画面转为显示黑色画面需要时间，详见 FIG1.。

FIG1. The definition of Response time

响应时间定义

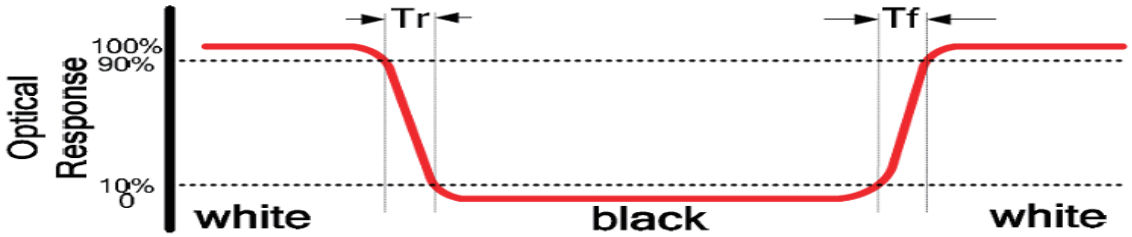

Note2.contrast Ratio(CR) is defined mathematically by the following formula ,For more information see FIG2.

Contrast Ratio(CR)=Average Surface Luminance with all white pixels/ Average Surface Luminance with all black pixels

备注 2.对比度是由以下公式计算所得。详见 FIG2.

对比度=显示白色画面时平均表面亮度（P1，P2,……)/显示黑色画面时平均表面亮度（P1，P2,……)

FIG2. Measuring method for Contrast ratio,surface luminance,Luminance uniformity,CIE(X,Y) chromaticity.

对比度，表面亮度，均匀度，CIE 坐标测试方法

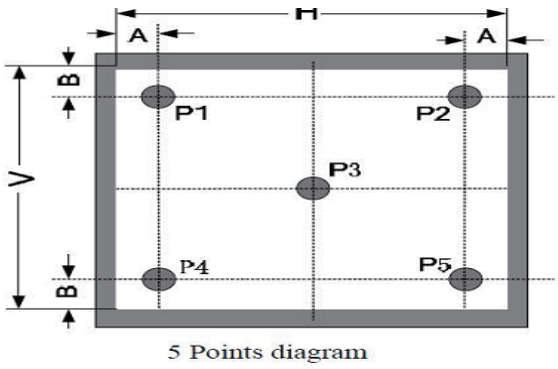

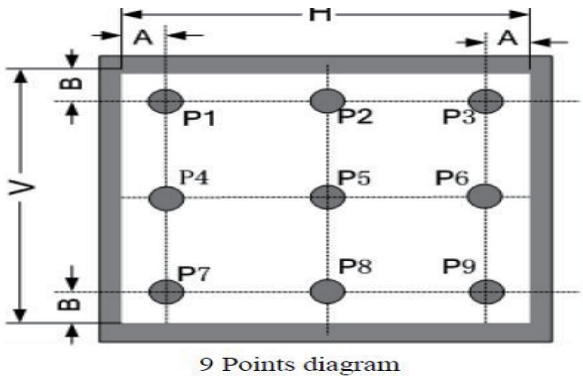

Note3.The uniformity in surface luminance(WHITE) is determined by measuring luminance at eath test position,and then dividing the maximum luminance of all white pixels by minimum luminance of all white pixels,For more information seeFIG2.

WHITE=Minimum Surface Luminance with all white pixels(P1,P2,.....)/Maximum Surface Luminance with all white pixels(P1,P2,.....)

备注 3.均匀度是在显示白色画面时，测试 P1 到 P9 的亮度，然后再用 9 个点亮度的最小值除以最大值。详见 FIG2.。

均匀度=白色画面下表面亮度最小值（P1，P2,……)/白色画面下表面亮度最大值（P1，P2,……)

Note4.Viewing angle is the angel at which contrast ratio is greater than a specific value.For TET module,the specific value of contrast ratio is 10.For monochrome and color stn module,the specific value of contrast ratio is2.The angles are determined for the horizontal or x axis and the vertical or y axis with respect to the z axis which is normal to the LCD surface.For more information see FIG3

备注 4.视角指对比度大于等于一个特定值时的可视范围，对 TFT 屏，对比对特定值为 10，对黑白屏 CSTN 屏，对比度特定值为 2，视角由横轴（X 轴），竖轴（Y 轴）同 Z 轴（垂直与 LCD 表面）之间的夹角来定义，详见 FIG3.。

FIG3 The definition of viewing angle 视角定义

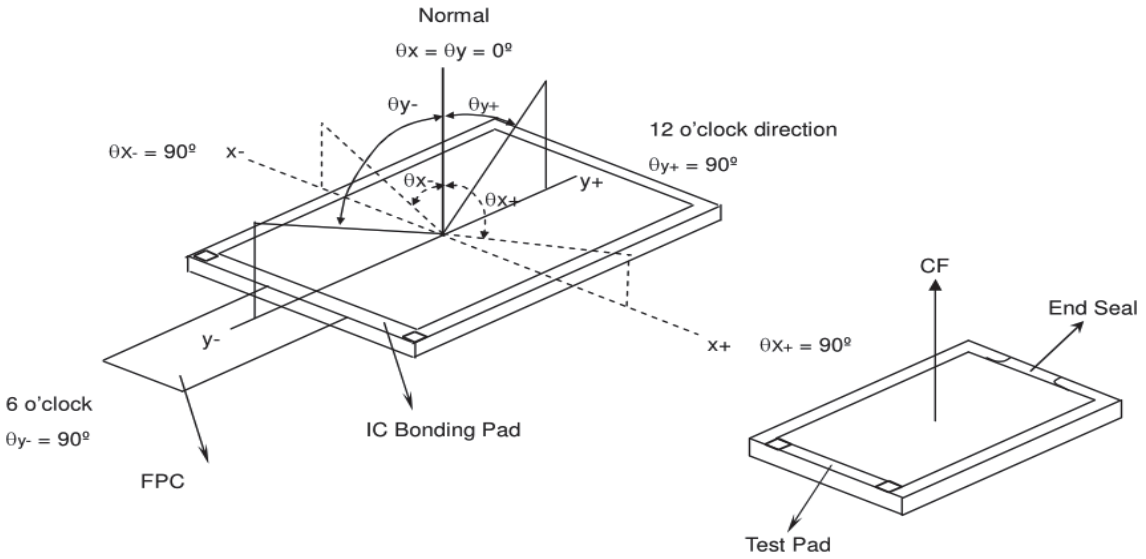

Note5. Surface luminance is the LCD surface luminance with all white pixels,For more information see FIG2.

LV=Average Surface Luminance with all white pixels(P1,P2,.....)

备注 5.表面亮度是在显示白色画面时，测试的亮度值，详见 FIG2.

Lv=平均的表面亮度（P1，P2,……)

Note6.CIE(X,Y)chromaticity is the Center point value.For more information see FIG2.

备注 6.选择中心点，分别测试 X，Y 值，详见 FIG2.。

Note7.For Viewing angle and response time testing,the testing date is base on Autronic-Melchers’s ConScope.Series instruments.For contrast ratio,Surface Luminance,Luminance uniformity and CIE,the testing date is base on CS-2000(BM-7/CA310) photo detector.

备注 7.视角和响应时间，测试数据基于 Autronil Melchers’s Conoscope 系列测试仪器，而对比度，表面亮度，均匀度 CIE 坐标，测试数据基于 CS-2000(BM-7/CA310)光学测试仪 。

Note8.For TN type TFT transmissive module,Gray scale reverse occurs in the direction of panel viewing angle

备注 8.TN 型 TFT 全透产品，在视角方向会发生灰度反转。

8. **Recommended Operating Sequence**

推荐上/下电工作流程

8.1 Power on/off sequence with 2- power

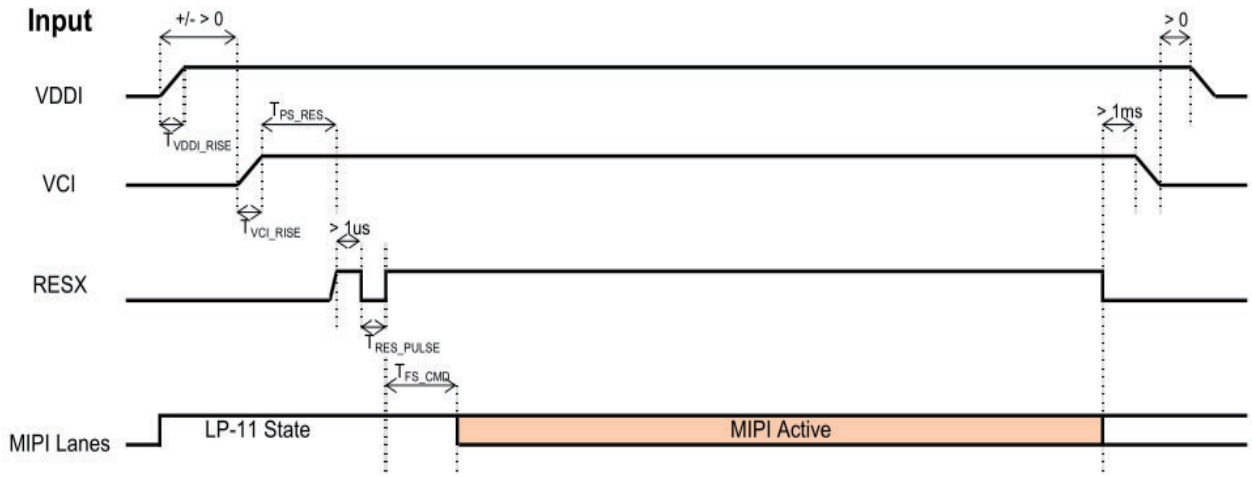

Symbol	Characteristics	Min.	Typ.	Max.	Units
T_{VDDI_RISE}	VDDI Rise time	20	-	-	us
T_{VCI_RISE}	Case A: VCI Rise time	200	-	-	us
	Case B: VCI Rise time	40			
T_{PS_RES}	VDDI/VCI on to Reset high	5	-	-	ms
T_{RES_PULSE}	Reset low pulse time	10	-	-	us
T_{FS_CMD}	Reset to first command	10	-	-	ms

8.2 Power on/off sequence with 3- power

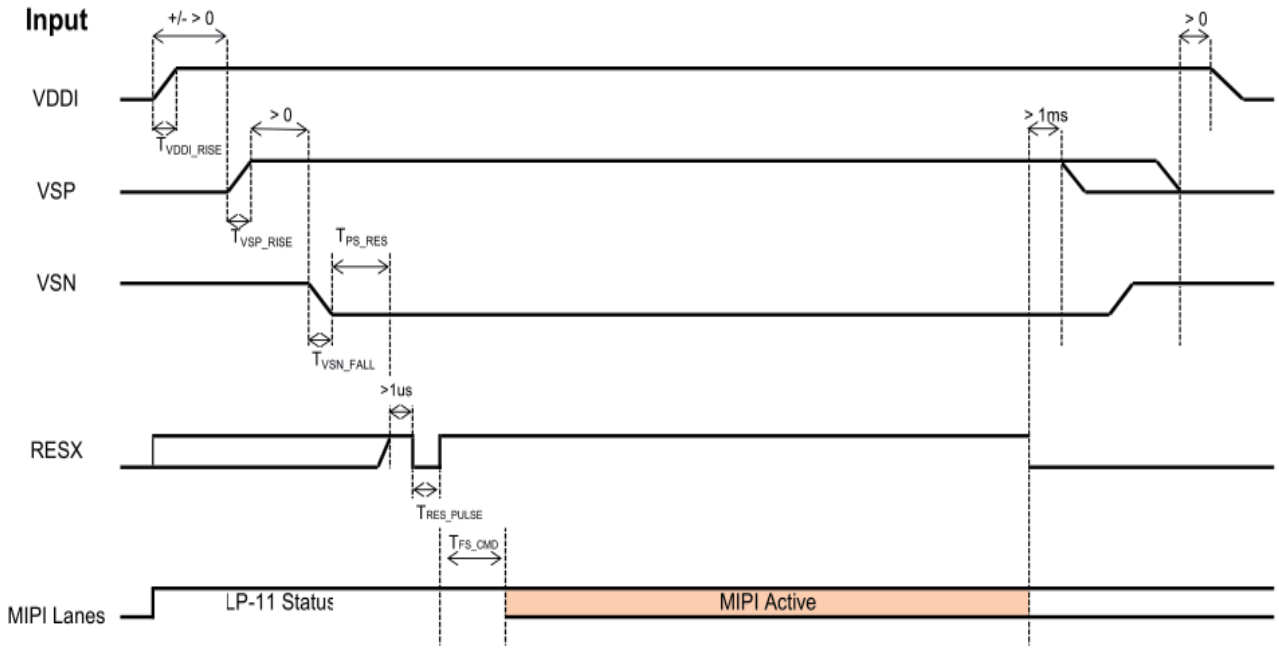

Symbol	Characteristics	Min.	Typ.	Max.	Units
T_{VDDI_RISE}	VDDI Rise time	20	-	-	us
T_{VSP_RISE}	VSP Rise time	200	-	-	us
T_{VSN_FALL}	VSN Fall time	200	-	-	us
T_{PS_RES}	VDDI/VSP on to Reset high	5	-	-	ms
T_{RES_PULSE}	Reset low pulse time	10	-	-	us
T_{FS_CMD}	Reset to first command	10	-	-	ms

NOTE: This section is only for reference,Details please refer to the IC specification.

备注：本节仅供参考,详细信息请参阅 IC 规格书。

9. RESET INPUT TIMING

复位时序

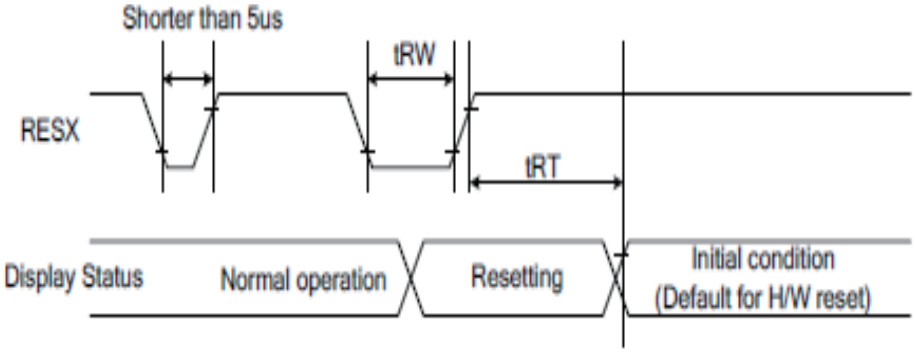

Figure 126: Reset Timing

Table 47: Reset Timing

Signal	Symbol	Parameter	Min	Max	Unit
RESX	tRW	Reset pulse duration	10		uS
	tRT	Reset cancel		5 (note 1,5)	mS
				120 (note 1,6,7)	mS

Notes:

1. *The reset cancel also includes required time for loading ID bytes, VCOM setting and other settings from EEPROM to registers. This loading is done every time when there is H/W reset cancel time (tRT) within 5 ms after a rising edge of RESX.*
2. *Spike due to an electrostatic discharge on RESX line does not cause irregular system reset according to the Table 48.*

Table 48: Reset Descript

RESX Pulse	Action
Shorter than 5us	Reset Rejected
Longer than 10us	Reset
Between 5us and 10us	Reset starts

3. During the Resetting period, the display will be blanked (The display enters the blanking sequence, which maximum time is 120 ms, when Reset Starts in the Sleep Out mode. The display remains the blank state in the Sleep In mode.) and then return to Default condition for Hardware Reset.
4. Spike Rejection can also be applied during a valid reset pulse, as shown below:

NOTE: This section is only for reference,Details please refer to the IC specification.

备注：本节仅供参考，详细信息请参阅 IC 规格书

10. Production process control 生产过程控制管理

WORKFLOW CHART
工作流程图

Flow Chart 流程图	Responsibility accounting 权责单位	Related Files 相关文件	Form used 指令表单	Describe 描述
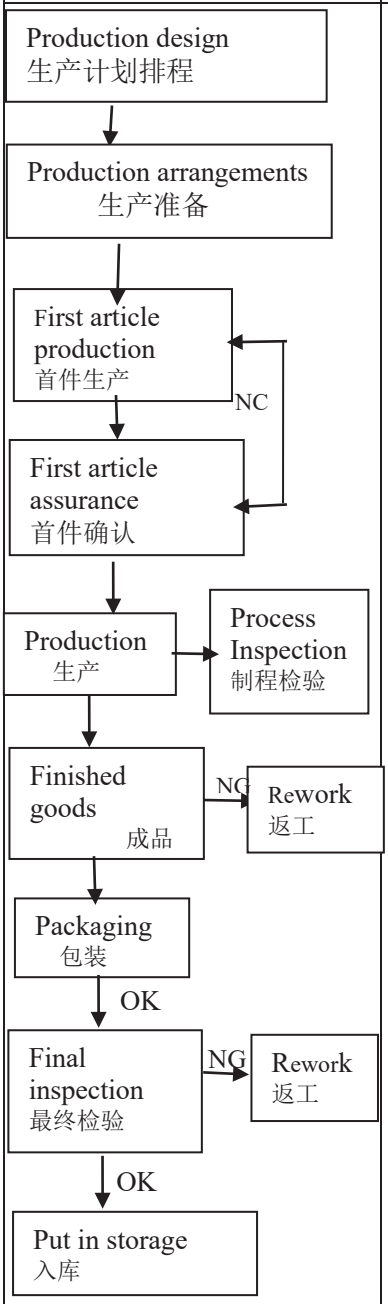	Product Material Control 生产计划与物料控制 Production department 生产部 Production department 生产部 Quality department 品质部 Production department or Quality department 生产部/品质部 Quality department 品质部 Production department 生产部 Production department or Quality department 生产部/品质部 Production department or storage 生产部/仓库	《Production planning and control documents》 《生产计划控制程序》 《Standard operation procedure》 《作业指导书》 《standard inspection procedure》 《制程检验标准书》 《Corrective and Preventive control procedure》 《纠正预防措施管理程序》 《Finished goods inspection procedure》《成品检验管理程序》 《Nonconforming Product Control Procedure》 《不合格品控制程序》 《Reprocessing management 》 《返工管理办法》 《Material handling management》 《物料搬运管制办法》	Production order 生产指令单 Requisition form 领料单 First article inspection report 首件检验报告 Checklist for process inspection 制程查核表 Notices for corrective and preventive 纠正/预防措施通知表 Certificate of quality 合格证 Storage lists 入库单	Keep good record from raw material input to finished product output . When an exception occurs,find out the reasons , take action to improve it and follow up the effect. we carried out strict control on each working procedure include IPQC check and finished goods inspection . We handle nonconforming product according to nonconforming Product Control Procedure. 从材料输入到输出产品各过程中，按规定做好相关记录，发生异常时，查找原因，制定改善措施，并追溯实施效果。 IPQC 巡检或成品检验过程中标识合格品方可转入下一工序。不合格品标识隔离依《不合格品控制程序》处理

11. INSPECTION SPECIFICATIONS

品质检验标准

不良项目	判定标准				缺点类别
点状缺陷	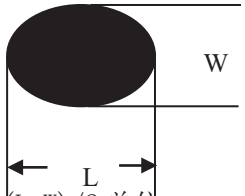 D=(L+W)/2 单位：mm 点不良间距需≥10mm	尺寸	允许个数		轻缺
		D≤0.10	忽略不计		
		0.10<D≤0.15	2 密集不可		
		0.15<D≤0.2	1		
		D>0.2	0		
亮点	1.单一点：单个 Pixel 2.连续点：相连 2 个 Pixel 3.亮点及暗点总个数不可超过 5 个	单一点	2		轻缺
		2 连续亮点	1		
暗点		单一点	5		
		2 连续暗点	1		
Mura	斑点、不均	参照 LCD 原厂判定标准，用 ND:5%			轻缺
电测 线状缺陷	 L：长度 W：宽度 线不良间距需≥10.0mm	尺寸	允许个数		轻缺
		W≤0.03	忽略不计		
		L≤5.0，0.03<W≤0.05	1		
		W>0.05	依点状缺陷判定		
外观 线状缺陷		尺寸	允许个数		
		W≤0.03	忽略不计		
		L≤10.0，0.03<W≤0.05	2 个		
		W>0.05	依点状缺陷判定		
LCD 角破损 (端子位)	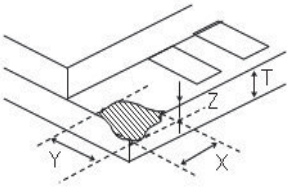	长度 X	宽度 Y	高度 Z	允许数	轻缺
		X≤2.0	Y≤2.0	Z≤T	2	
		2.0<X≤3.0	2.0<Y≤3.0	Z≤T	1	
		X>3	Y>3	Z≤T	0	

LCD 边破损（端子位）	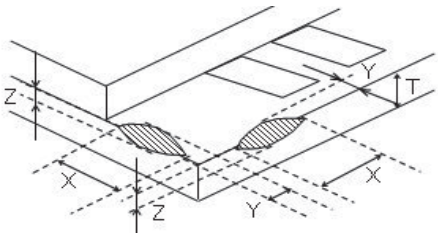		1. 长度 X≤5.0 宽度 Y≤1.0 2. 崩裂位置不可伤及 ITO 线路、不可影响 bonding			轻缺
LCD 角破损（非端子部）	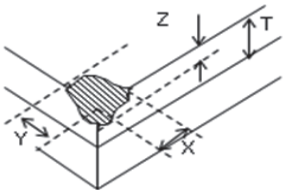 崩裂位置不可伤及线路	长度 X	宽度 Y	高度 Z	允许数	轻缺
		X≤2.0	Y≤2.0	不计	2	
		2.0<X≤3.0	2.0<Y≤3.0	不计	1	
		X>3	Y>3		0	
LCD 边破损（非端子部）	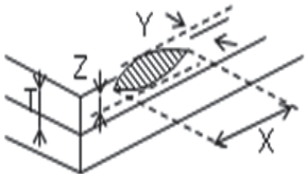 崩裂位置不可伤及线路	长度 X	宽度 Y	高度 Z	允许数	轻缺
		X≤7.0	Y≤0.5	Z≤T/2	2	
		X≤7.0	0.5<Y≤0.8	Z≤T	1	
		X>7.0	Y>0.8		0	
玻璃突出	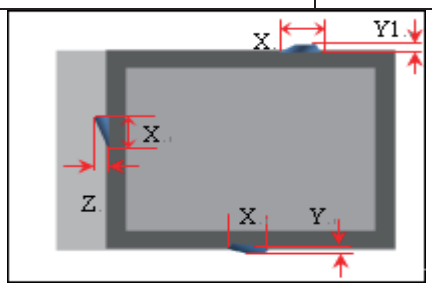		1. Y、Y1、Z 均≤0.2 且 Y+Y1≤0.2 时 X 长度不计 2. Y、Y1、Z>0.2 或 Y+Y1>0.2 时，不允许			轻缺
LCD 裂纹	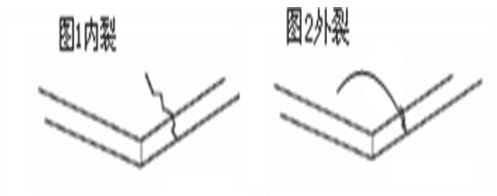		1:内裂发生不可。 2:外裂修正以玻璃破损规格判定,但不能有可清除的玻璃屑付着。			重缺
外观检查	CF 偏光片保护膜上划线不可有、气泡不可有、盖章不可有（依客户特殊要求）					轻缺

Note;The rest of the test items according to our standards

注：其余测试项按我司标准执行

12. RELIABILITY TEST CONDITIONS
可靠性测试条件

NO. 序号	Test Item 实验项目	Test Condition 实验条件	Inspection after test 实验后检查
1	High Temperature Storage 高温存储测试	80°C±2°C/48 hours	Inspection after 2~4 hours storage at room temperature ,the sample shall be free from defects:实验结束后，已测试的 LCD 样品必须在室内正常温湿度环境下放置，2~4 小时以上才能进行功能和外观检查，样品不允许有以下缺陷： 1.Air bubble in the LCD;模块中有气泡 2.Sealleak;封口松脱 3.Non-display;不显示 4.missing segments;漏笔 5.Glass crack;玻璃破碎 6.Current IDD is twice higher than initial value. 电流 IDD 大于初始值的两倍。
2	Low Temperature Storage 低温存储测试	-30°C±2°C/48 hours	
3	High Temperature Operating 高温操作测试	70°C±2°C48 hours	
4	Low Temperature Operating 低温操作测试	-20°C±2°C/48 hours	
5	Temperature Cycle 冷热循环存储	-20°C±2°C~25°C~70°C±2°C*10cycles (30min.) (5min.) (30min.)	
6	Damp Proof Test 防潮测试	55°C±5°C*90%RH/48 hours	
7	ESD Test 抗静电性测试	测试前对样品进行外观和功能测试，采用空气放电，对 TP 进行单次放电，9 个点每一点放电一次，每次间隔≥5s，9 个点为一个循环。放点电压：±8KV，每一个循环放电后进行检查，如果合格就进行下一循环测试，如果不合格，试验停止，并进行问题判定	试验样品电气功能正常

13. PRECAUTIONS FOR USING LCD MODULES
模组使用注意事项

1. Handing precautions 使用注意事项

1.1 The display panel is made of glass and polarizer.As glass is fragile.It tends to become or chipped during handing especially on the edges.Please avoid dropping or jarring.Do not subject it to a mechanical shock by dropping it or impact.

显示屏由玻璃和偏光片组成，由于玻璃是脆的，使用过程中要特别注意边缘区，请防止跌落或震动，不能机械碰撞。

1.2 Do not apply excessive force to the display surface or the adjoining areas since this may cause the color tone to vary.Do not touch the display with bare hands,This will stain the display area and degraded insulation between terminals(some cosmetics are determined to the polarizer)

请勿施加过大的压力与显示屏或连接部位，否则会引起色调变化，不要用手接触显示屏，这将弄脏显示区和降低端子之间的绝缘能力，（一些外观是由偏光片决定的）

1.3 The polarizer covering the display surface of the LCD module is soft and easily scratched. Handle this polarizer carefully.Do not touch,push or rub the exposed polarizers with anything harder than an HB pencil lead(glass,tweezers,etc)Do not put or attach anything on The display area to avoid leaving marks on it.Condensation on the surface and contact with terminals due to cold will damage,stain or dirty the polarizer.After products are tested at low temperature they must be warmed up in container before coming in to contact with room temperature air.

覆盖液晶显示模块显示平面的偏光片是软性且易被擦伤，请小心轻拿，请勿用任何硬度大于 HB 铅笔芯的物品（玻璃，镊子等）接触、撞压或摩擦裸露偏光片，不要放置或粘附物体在显示区域上以免留下痕迹，冷凝在表面和端子将会损坏或弄脏偏光片，产品在低温下测试之后，与室温空气接触之前必须在容器内升温。

1.4 Tools required for assembling,such as soldering irons,must be properly grounded.Make certain the AC power source for the soldering iron does not leak.When using an electric screwdriver to attach LCM,the screwdriver should be of ground potentiality to minimize as much as possible any transmission of electromagnetic waves produced sparks coming from the commutator of the motor.

使用工具如电烙铁，要可靠接地，并确保烙铁使用交流电，不要漏电，用电批固定模块时，电批应接地，尽可能降低电动换向器火花产生的电磁波。

2. Handing precaution for LCM 模块操作规范

2.1 LCM is easy to be damaged.Please note below and be careful for handing.

液晶显示模块很容易被损坏，请注意以下并小心操作

2.2 Correct handing;正确操作

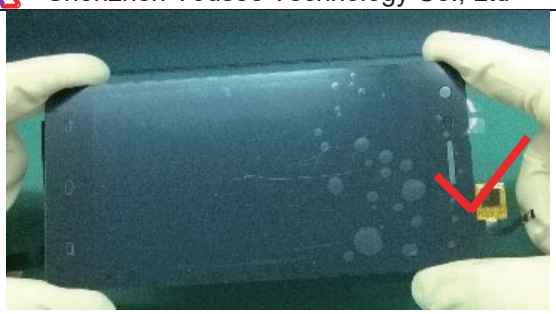

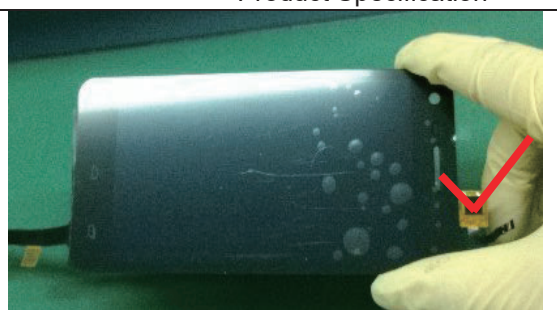

As above picture,Please handle with anti-static glovers around LCM edges.
像上面的图片，请戴防静电手套，并拿模块边缘。

2.3 Incorrect handing 错误操作

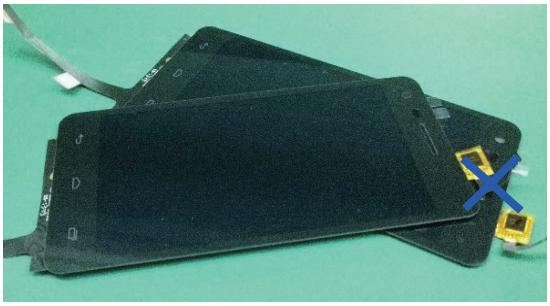

Please don't stack LCM
不要把模块叠在一起

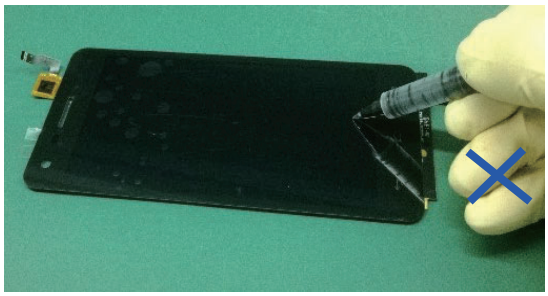

Please don't operate with sharp stick such as pens
请不要用尖锐的物体来操作，例如用笔尖

2.4 Input logic voltage before apply analog high voltage such as LCD driving voltage when power on.Remove analog high voltage before logic when power off the module.Input each signal after the positive/negative voltage becomes stable.

开机时，先开逻辑电压，再接通模拟电压，如显示屏驱动电压。关机时，先断开模拟电压，再关逻辑电压，正负电源都稳定后再送控制信号。

2.5 If the LCD modules have been operating for a long time showing the same display pattens,the display patterns may remain on the screen as ghost images and a slight contrast irregularity may also appear.A normal operating status can be regained by suspending use for some time.It should be noted that this phenomenon does not adversely affect performance reliability.

如果液晶显示模块长时间工作于同一个显示图案，换屏时会出现鬼影，也会出现轻微的对比度不均，停止使用一段时间后可恢复到正常状态，此现象不会严重影响性能可靠性。

2.6 Please keep the temperature within the specified range for use and storage.Polarization degradation,bubble generation or polarizer peel-off may occur with high temperature and high humidity.

模块在操作和存储规范范围内使用，高温高湿可能会引起偏振退化，气泡，偏光片脱落等问题。

3. Storage Precautions 存储注意事项

3.1 When storing the LCD modules,the following precaution are necessary.
液晶显示模块的存储依照以下几点:

3.2 Store them in sealed polyethylene bag.If properly sealed,there is no need for the desiccant
使用聚乙烯密袋封，如果密封得当，不需要干燥剂。

3.3 Store them in a dark place.Do not expose to sunlight or fluorescent light,keep the temperature between0~35℃,and keep the relative humidity between40％RH and 40％RH.
避光保存，避免直接暴晒在太阳光或黄光灯下，保持温度在 0~35℃之间，保持相对湿度在 40％

RH 和 60%RH 之间。

3.4 The polarizer surface should not come in contact with any other objects(We advise you store them in the anti-static electricity container in which they were shipped)

偏光片表面避免接触其他物质（建议存放在货运防静电包装中

4 Transportation Precautions 运输注意事项

4.1 During shipment,pleas handle with care.The packaging bag can not be broken,step on trap.Packing Carton layer height can not be over two meters .

装运过程要轻拿轻放，不能出现包装袋破损，塌陷，卡通箱叠层高度不能超过两米。

4.2 The transportation process should pay attention to the waterproof and moisture-proof measures.Product can not be watering.Ethylene sealed bags can not be unsealed.

运输过程要注意有防水和防潮措施，产品不能淋水，产品乙烯密封袋不可拆封。

14. PACKING SPCIFICATION

包装规格(370*300*150)

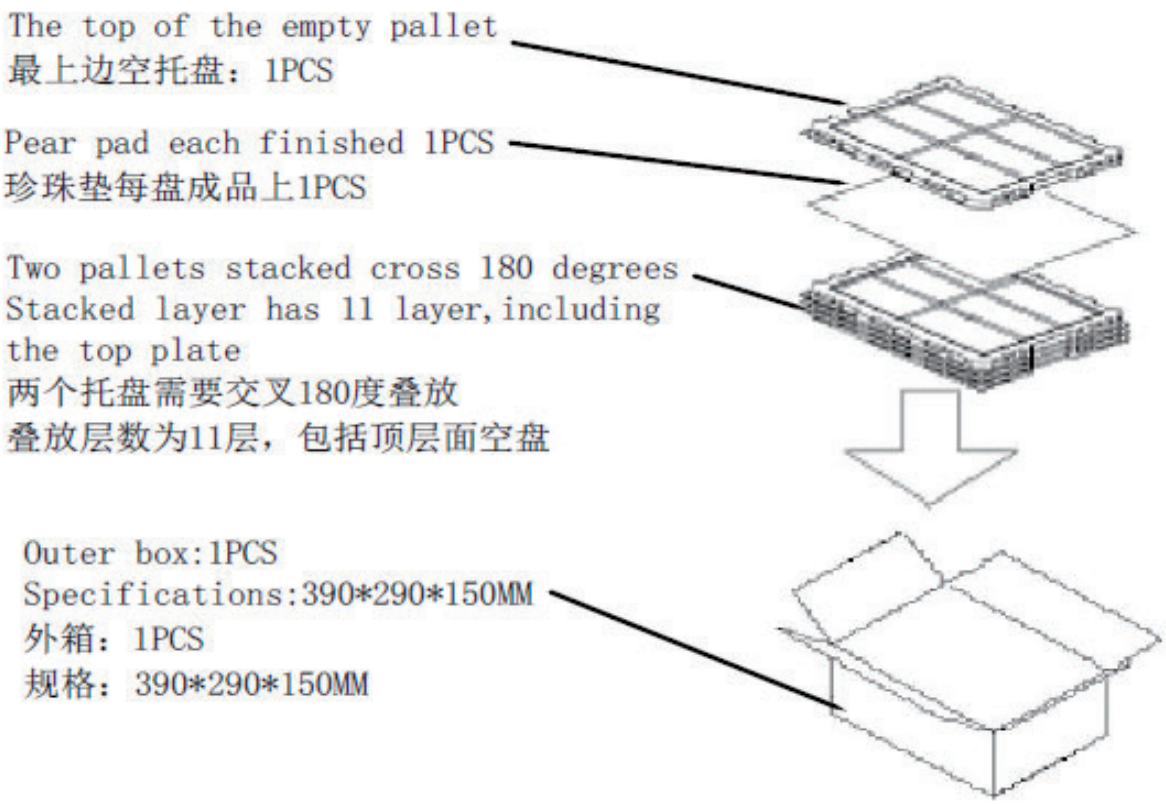

15. SPECIAL REMAKS
注意事项

1. The above specifications are the binding criteria for YX Technology's outgoing quality inspection.
   以上规格描述为宇锡的品质出货标准
2. The customer is kindly requested to inform YX Technology as soon as possible on any questions, remarks, and disagreements regarding these specifications.
   对于规格中的任何问题或存在疑问，客户可随时向宇锡公司进行咨询。
3. YX is not responsible for damage to its products due to neglect of the precautions as described in the previous chapter.
   如果不按照规格书要求进行操作而损坏产品的，宇锡不承担责任。
4. About the limited warranty unless special agreement between YX and customer YX will replace or repair any of its products that are found to be functionally defective when inspected in accordance withYX acceptance standards for a period of one year from data of shipments.
   除宇锡跟客户签定协议外，对确认为属于产品本身功能性缺陷的，在宇锡可接受范围内可进行退换或维修，宇锡保质期为从出货日期起一年内有效。